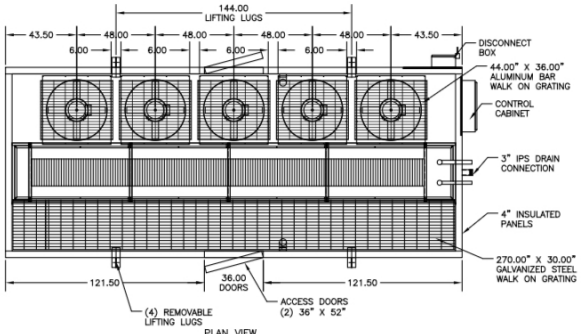

PLAN VIEW

UNIT DATA:
MODEL (FOUR) SSTP5-9583-500L LEFT HAND

FANS – (5) 36" DIA FANS (U2-27Y-6-36 PM)

66,500 CFM @ 0.30" EXTERNAL STATIC PRESSURE
1200 RPM
3.8 BHP (OPERATING TEMPERATURE)

MOTORS – (5) 5.0 H.P. 460 VOLT, 3 PHASE, 60HZ, 1200 RPM, TEAO, PREMIUM EFFICIENCY, VFD READY 215T FRAME, LOW TEMPERATURE LUBRICATION

COOLING COIL – (1) 8 ROW, 3 FINS PER INCH 57" X 240" L.H.
ROOM TEMP.: –10°F.
COIL VOLUME: 17.4 CU. FT.
SATURATED SUCTION TEMPERATURE: –20°F.
TONNAGE: 36
COIL SHALL HAVE A 43,200 BTU/°F BASIC RATING
T.D.: 10°F.
TYPE OF REFRIGERANT: PUMPED CO2, 3 TO 1 FEED RATE BOTTOM FEED
(1) INLET – 1.50" (1) OUTLET – 2.0"
STAINLESS STEEL TUBE – ALUMINUM FIN (1.05" EVAPCO)

UNIT – 13,100 LBS
DISCHARGE PLENUM – 2,100 LBS
TOTAL WEIGHT – 15,200 LBS

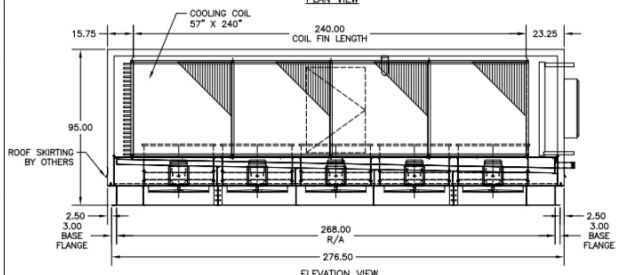

ELEVATION VIEW

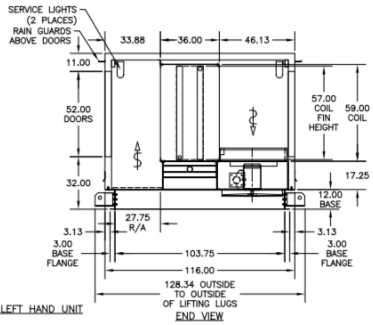

END VIEW

SSTP5-9583-500L LEFT HAND UNIT
TAG: FREEZER 142

"90 MPH WIND RATING"
BOLT BASE OF UNIT TO BUILDING STRUCTURE USING (64) 5/8" BOLTS

CONFIDENTIAL
This document is the property of Evapco, Inc. It should not be copied or disclosed without prior written authorization.

REVISIONS

REV.	DESCRIPTION	BY

TITLE: XTL
COUNCIL BUFFS, IA

MAT'L	DATE 6-26-15	ORDER NO.	
MAT'L REL	DRWN JKN	SCALE	
	CHKD BY	SLS INFO.	
evapco	PART NO. 15-762127-30		REV. NO.