NOTES:
1.ALL INTERNAL VESSEL SURFACES CLEANED PRIOR TO VESSEL FABRICATION.
2.VESSEL (UNLESS STAINLESS STEEL) EXTERIOR IS PAINTED WITH ONE COAT RUSTPREVENTATIVE PRIMER AFTER SURFACES ARE CLEANED AND PREPARED.
3.ALL PIPE NOZZLES TO EXTEND 6" FROM HEAD OR SHELL UNLESS OTHERWISE SPECIFIED.
4.ALL CLOSURES INSTALLED FOR HYDROSTATIC TEST WILL BE IN PLACE FOR SHIPMENT.
5.ALL UNITS ARE INCHES UNLESS OTHERWISE NOTED.
6.LONGITUDINAL SEAM NO MORE THAN 25° OFF THE VERTICAL UNLESS OTHERWISE SPECIFIED.
7.VESSEL TO BE DRAINED AND "HEAT-DRIED".
8.ALL FITTINGS INTERNAL AND EXTERNAL EXTENSIONS TO BE IN ACCORDANCE WITH ENGINEERING STANDARD BSES04-01, UNLESS OTHERWISE NOTED ON DRAWING.

SPECIAL INSTRUCTIONS:
1.

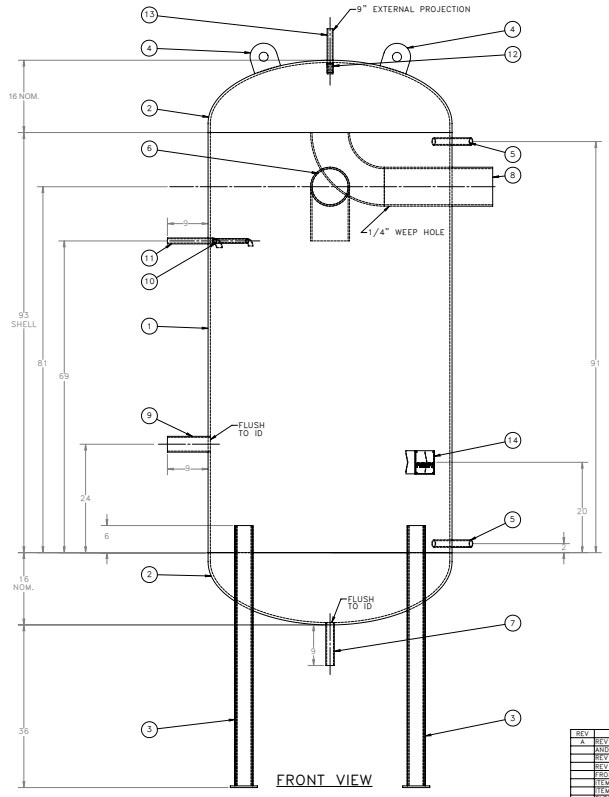

FRONT VIEW

ITEM NO.	QTY	PART NUMBER	DESCRIPTION	FUNCTION
1	1	3-3637	ROLLED SHELL 54"OD X 1/2"THK SA516-70 93" LG.	SHELL
2	2	3-3481	HEAD 54"OD X 1/2" NOM.THK, 2:1 ELLIP, SA516-70 NORMALIZED, BEVELED	HEAD
3	4	3-3011; 3-3574	ANGLE IRON 4"X4"X3/8" SA36 57-5/8" LG. ; 6" L X 6" W PLATE SHEET 3/8" THK SA516-70	ANGLE IRON LEGS
4	2	3-3862	LIFTING LUGS, 6"X6"X1/2" THK WITH 2" HOLES	LIFT LUG
5	2	3-3508	1-1/4" PIPE X 10-1/2"" LG. S/80 SMLS SA-106-B	COLUMN CONNECTION
6	1	3-3530; 3-3414	8" PIPE X 16" LG. S/40 SMLS SA-53-B; 8" ELBOW 90° LR SA-234-WPB	SUCTION IN
7	1	3-3511	1-1/2" PIPE X 10-1/2" LG. S/80 SMLS SA-106-B	DRAIN
8	1	3-3530; 3-3414	8" PIPE X 24" LG. S/40 SMLS SA-53-B; 8" ELBOW 90° LR SA-234-WPB	SUCTION OUT
9	1	3-3516	3" PIPE X 9-1/2" LG. S/40 SMLS SA-106-B	TRANSFER OUT
10	1	3-3504; 3357	3/4" PIPE X 11" LG. S/80 SMLS SA-106-B; ELBOW WELD 3/4" LR 90 DEG S/80	OIL POT VENT
11	1	3-3506; 3-3391	1" PIPE X 11" LG. S/80 SMLS SA-106-B; ELBOW WELD 1" 90 DEG LR S/80 SA234	TRANSFER VENT
12	1	3-3189	3/4" COUPLING 3000# F. TH. SA-105	RELIEF
13	1	3-3506	1" PIPE X 11" LG. S/80 SMLS SA-106-B	ECO
14	1	3-B11731-L; 3-A14206	BRACKET NAMEPLATE 5-3/4" X 5-1/8" X 12GA X 3" STANDOFF; NAMEPLATE 4-7/8" X 5-1/2" 304SS	NAMEPLATE
15	1	PAINT SILOXANE	PSX 700 ENGINEERED SILOXANE COATING TINTED TO - H A PHILLIPS BLUE	SILOXANE PAINT

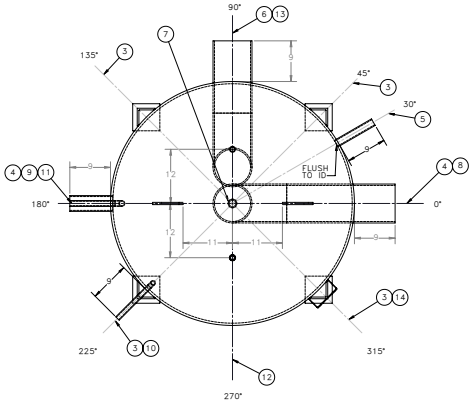

TOP VIEW

REV	CHANGE	DATE	CAD	ENG
A	REV ITEM 3 LENGTH FROM 45-5/8"; REV ITEM 4 LOC FROM 90° AND 270°; REV ITEM 5 LOC FROM 270°, LENGTH FROM 7-1/2"; REV ITEM 6 DIA FROM 10"; LENGTH FROM 18"; LOC FROM 180°; REV ITEM 7 LENGTH FROM 8", MADE FLUSH; REV ITEM 8 LENGTH FROM 21"; REV ITEM 9 LENGTH FROM 7", LOC FROM 5"; REV ITEM 10 LOC FROM 135°, LENGTH FROM 8", ADDED ELBOW; REV ITEM 11 DIA FROM 1-1/4", LENGTH FROM 8", FLUSH, ADDED ELBOW; REV ITEM 12 LOC FROM CENTER; REV ITEM 13 LOC FROM 180°, LENGTH FROM 8", DIA. FROM 3/4"	2/8/17	ES	SY

CUSTOMER: SUMMIT REFRIGERATION
CUSTOMER PO #: 34063
JOB (TAG): GOLDEN STANDARD BAKING-NEW FAC
APPLICATION (MEDIUM): R-717
QUANTITY: 1
NATIONAL BOARD #:
H.A. PHILLIPS & CO. S.O.#: 1763600

Phillips® PRESSURE VESSELS
H.A. PHILLIPS & CO.
PLYMOUTH, WISCONSIN 53073
PHONE: (920) 893-8321
FAX: (920) 893-8779
WEB: www.haphillips.com

54" X 125"
VERTICAL SUCTION
ACCUMULATOR

MIN. REQUIRED THICKNESS
HEAD: Tmin=0.457" SHELL: Tmin=0.485"

A.S.M.E. CODE CONSTRUCTION
INSPECTED, STAMPED AND CERTIFIED
INT. MAWP250 P.S.I.@-20°F TO 450°F
EXT. MAWP 15 P.S.I.@-20°F TO 450°F
MDMT: -20° F @ 250 P.S.I.
HYDROSTATIC TEST: 375P.S.I.

SCALE	DRAWN BY	DATE
1:10	ES	1/26/2017

22210 — REV A
22210(a)

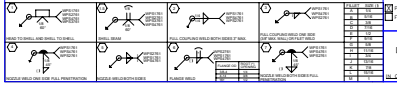

1	1	1
2	2	2
3	4	4
4	2	2
5	2	2
6	1	1
7	1	1
8	1	1
9	1	1
10	1	1
11	1	1
12	1	1
13	1	1
14	1	1
15	1	1

ENGINEERING APPROVAL
APPROVED: DATE:
PRELIMINARY SY 2/8/17
FINAL

QUALITY ASSURANCE APPROVAL
APPROVED: CAD: DATE:
PRELIMINARY
FINAL
AS BUILT

ESTIMATED WEIGHT (LBS): 3746
ESTIMATED EMPTY WT. (LBS): 3746

THE INFORMATION CONTAINED ON THIS DRAWING IS PROPRIETARY TO H. A. PHILLIPS & CO. AND MUST BE CONSIDERED CONFIDENTIAL AND UNPUBLISHED. ANY REPRODUCTION IN PART OR WHOLE WITHOUT WRITTEN PERMISSION IS STRICTLY PROHIBITED.

FINAL CUSTOMER DRAWING APPROVAL
REQUIRED BY:
IN ORDER TO SHIP BY:

CUSTOMER APPROVALS
APPROVED: DATE:
APPROVED
RESUBMIT FOR APPROVAL

A.S.M.E.
CODE EDITION: 2013 JOB NO:
ADDENDA: ISSUED TO:
APPROVAL: DATE: